SPECIFICATION:

JOSAM 17720-M1780 SERIES FLOOR MOUNTED SINK CARRIER WITH SUPPORT PLATE, ADJUSTABLE RODS, HEADERS, AND STRUCTURAL UPRIGHTS.

SINK CARRIER

SPECIAL

SERIES **17720-M1780**

NOTES:
NOT ALL HARDWARE SHOWN.

JOSAM RECOMMENDS - FEET BE SECURED TO FLOOR WITH 1/2" BOLTS AND ANCHORS BY OTHERS

MANUFACTURER	DIM "A"	DIM "B"
ACORN / WHITEHALL MANUFACTURING 4111	22	42-1/2
NEO METRO 4171 & 9171	16	38-1/2

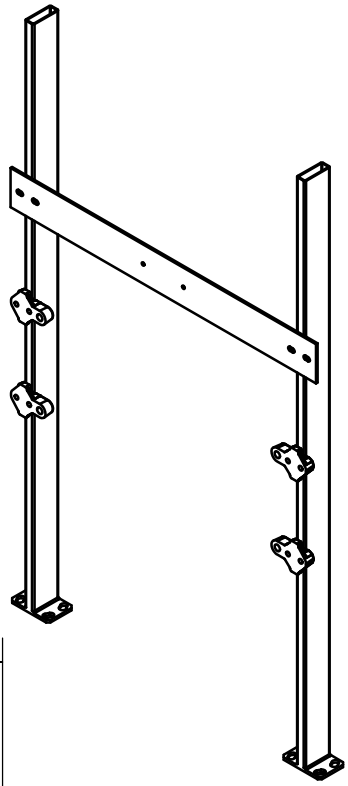

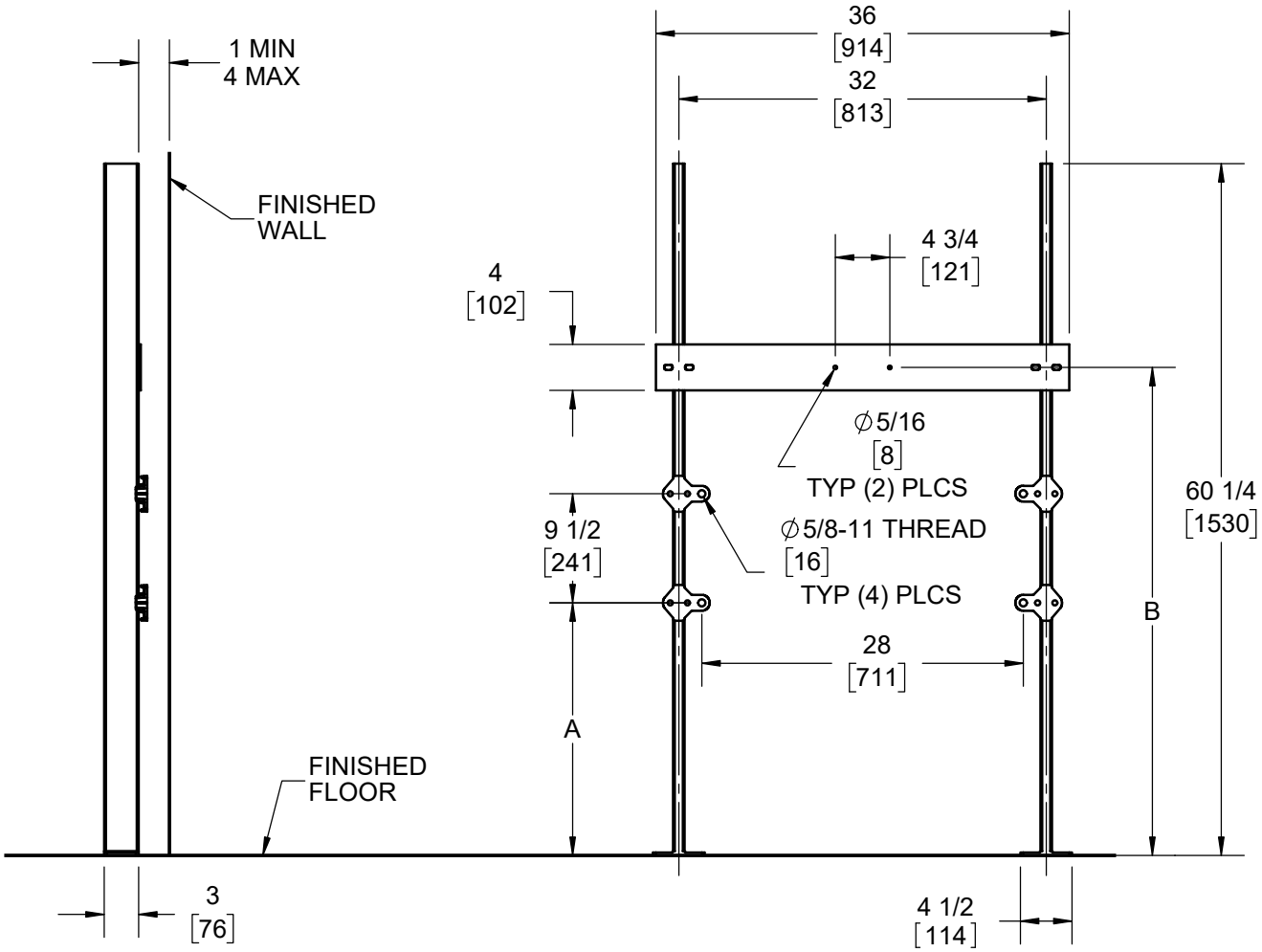

WARNING: Cancer and Reproductive Harm - www.P65Warnings.ca.gov

DATE OF LAST CHANGE: 04/10/24 JTJ

DIMENSIONS ARE SUBJECT TO MANUFACTURERS TOLERANCES AND CHANGE WITHOUT NOTICE. WE CAN ASSUME NO RESPONSIBILITY FOR USE OF SUPERSEDED OR VOID DATA.

JOSAM
MICHIGAN CITY, INDIANA

NOTES